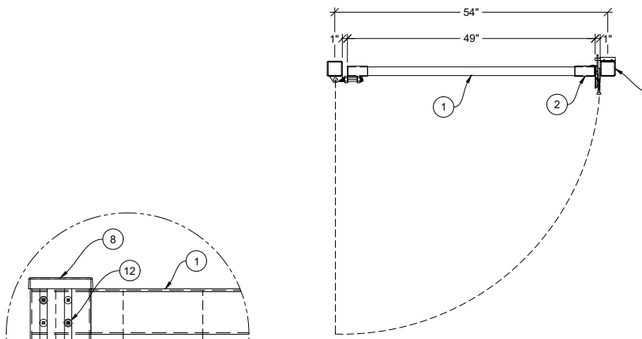

3 PLAN VIEW
SCALE: 1/2" = 1'-0"

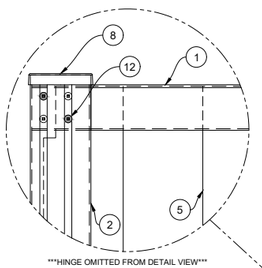

HINGE OMITTED FROM DETAIL VIEW

DETAIL-B
SCALE: NTS

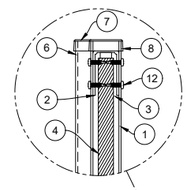

DETAIL-A
SCALE: NTS

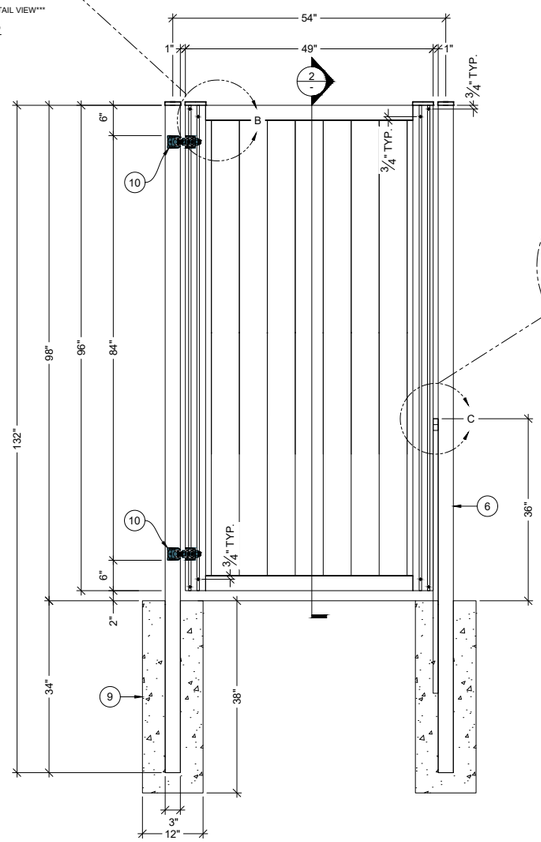

1 FRONT ELEVATION VIEW
SCALE: 1/2" = 1'-0"

DETAIL-C
SCALE: NTS

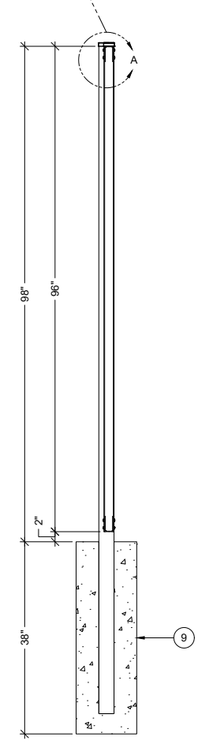

2 SECTION
SCALE: 1/2" = 1'-0"

BILL OF MATERIALS

ITEM	QTY	PART NUMBER	DESCRIPTION
1	2	3" X 1-3/4" X 1/8", 4'-1" CHANNEL	HORIZONTAL (TOP/BTM) GATE RAIL ALUMINUM CHANNEL
2	2	4" X 2" X 1/8", 6'-0" CHANNEL	VERTICAL GATE FRAME ALUMINUM CHANNEL
3	N/A	CHANNELS ALLOW FOR UP TO 1" THK INFILL MATERIAL	QUANTITY MAY VARY DEPENDING ON INFILL TYPE SELECTED
4	7	1" X 6" X 4'-0" BOARDS	INFILL EXAMPLE ILLUSTRATED: BOARDS
5	2	1" X 6" X 4'-0" NOTCHED INFILL/BOARDS	TWO BOARDS TO BE NOTCHED FOR BOLT CLEARANCE AT TOP AND BTM CHANNEL
6	2	3" X 3" X 14GA, 7'-0" POST	GATE POST
7	2	3" X 3" CAP	GATE POST CAP
8	2	4" X 2" CAP	VERTICAL GATE FRAME CAP
9	2	12" DIAMETER CONCRETE PIER	GATE POST PIER SIZE AND DEPTH TO BE SPECIFIED BY PROJECT EOR
10	2	SS COM DUTY EMBASSY HINGES [KSS-HDEMBCHS]	GATE FRAME HINGES FOR 180° SWING (ADJUSTABLE HINGE GAP ½"- 2¾")
11	1	SS DUAL LOCKABLE ECONOMY LATCH [KSS-DUAL]	LARGE SS DUAL ECONOMY GATE LATCH WITH ½" BAR
12	16	ANSI B18.6.4 - No.12 X 1" SELF-TAPPING SCREW	STAINLESS STEEL SELF-TAPPING SCREW

DIMENSIONS ARE IN INCHES
UNLESS OTHERWISE SPECIFIED:

TOLERANCES:
FRACTIONAL ± 1/32"
ANGULAR: MACH / BEND ±1/2"
TWO PLACE DECIMAL ± .03
THREE PLACE DECIMAL ± .005

FENCE TRAC

TITLE:
LH PEDESTRIAN SWING GATE 48in W X 96in H

PROPRIETARY AND CONFIDENTIAL
THE INFORMATION CONTAINED IN THIS DRAWING IS THE SOLE PROPERTY OF FENCE TRAC. ANY REPRODUCTION IN PART OR AS A WHOLE WITHOUT THE WRITTEN PERMISSION OF FENCE TRAC IS PROHIBITED

	NAME	DATE
DRAWN:	NLI	26-DEC-22
REVISED:	-	-
REVISED:	-	-
MATERIAL:	STEEL/ALUMINUM	

SIZE: B
DWG. NO. 24-0729-003
REV: A
SCALE: SEE DRAWING
SHEET: 1 OF 1